ANGELL

TCQ-III

Flat Panel Detector

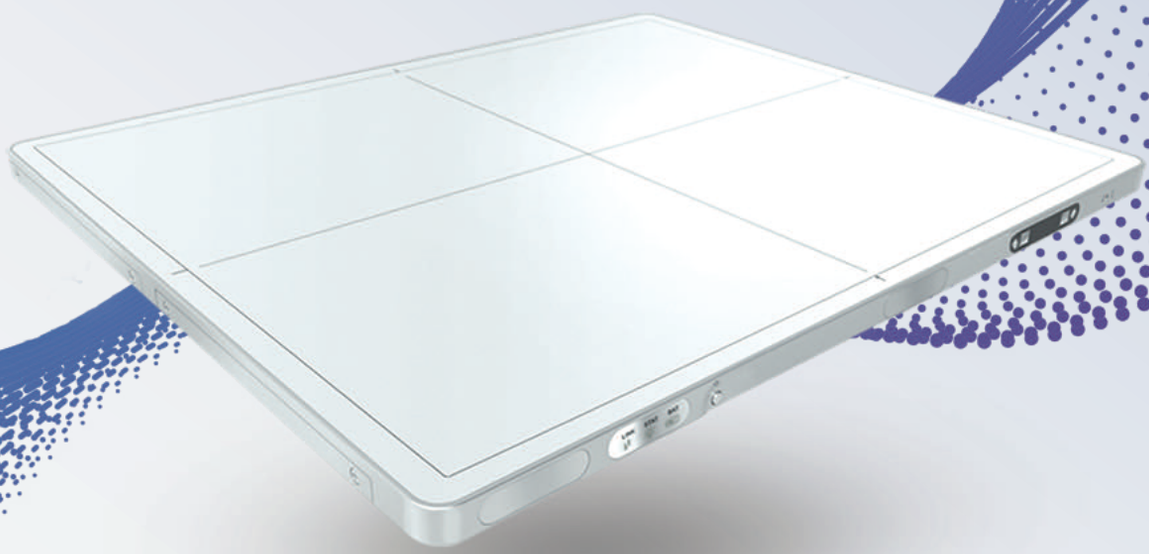

Product Features

139μm Small Pixel Size	**8H** Long Battery Standby Time	**AED** Sensitive Trigger	**IPX4** Strict Protection
3072×3072 High Resolution	**2S** Fast Image Preview Time	**5G** High Speed WiFi	**4.3KG** Light Weight

Technical Specifications

Model	TCQ-III
Sensor Type	a-Si
Scintillator Type	CsI
Maximum Image Size	17 × 17 inch
Pixel Matrix	3072 × 3072
Pixel Size	139 μm
Spatial Resolution	3.7 lp/mm
Grayscale	16 bit
Image Preview Time	2 s (wire) / 1 s (wire)
Battery Standby Time	8 h
Connection	Wire (5G, 802.11ac) / Wire
Trigger Mode	AED / Software
Resistant	IPX4
Power Supply	AC 100 ~ 240 V, 50/60 Hz, 20 W
Weight	3.5 kg/3.0kg
Dimensions	460 × 460 × 15 mm
Operating Ambient Temperature	5 ~ 35 °C
Operating Relative Humidity	10 ~ 75 %

Dimensions

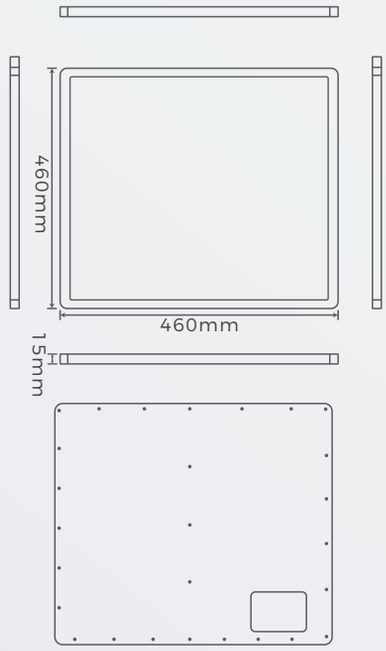

Clinic Images

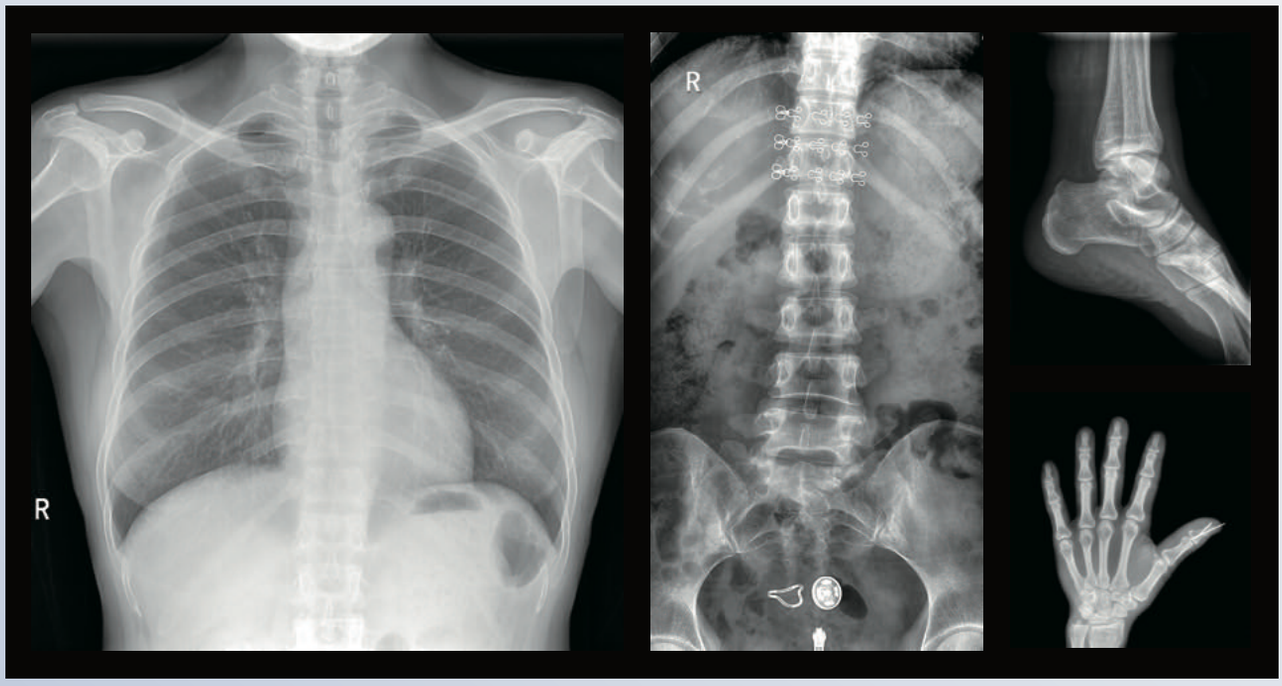

ANGELL

Shenzhen Angell Technology Co., Ltd.
Room 408, Building A, Huahan Innovatiosn Park, Langshan Road, Nanshan District,
Shenzhen 518057, China
Tel: (+86) 755-86966744 Fax: (+86) 755-26859389
Email: market@szangell.com Web: www.szangell.com